www.kieslermachine.com
info@kieslermachine.com
Toll Free : 888-565-6610

9"x 8.75" Model K Hinges

Model Number: 2150-K-RH **Price: $ 1420**

- Material Type: Carbon Steel
- Maximum Vertical Load: 13,000 LBS
- Maximum Radial Load: 6,820 LBS
- Approx. Width: 8.75"
- Height: 9"
- Leaf Thickness: 1"
- Weight: 61 LBS

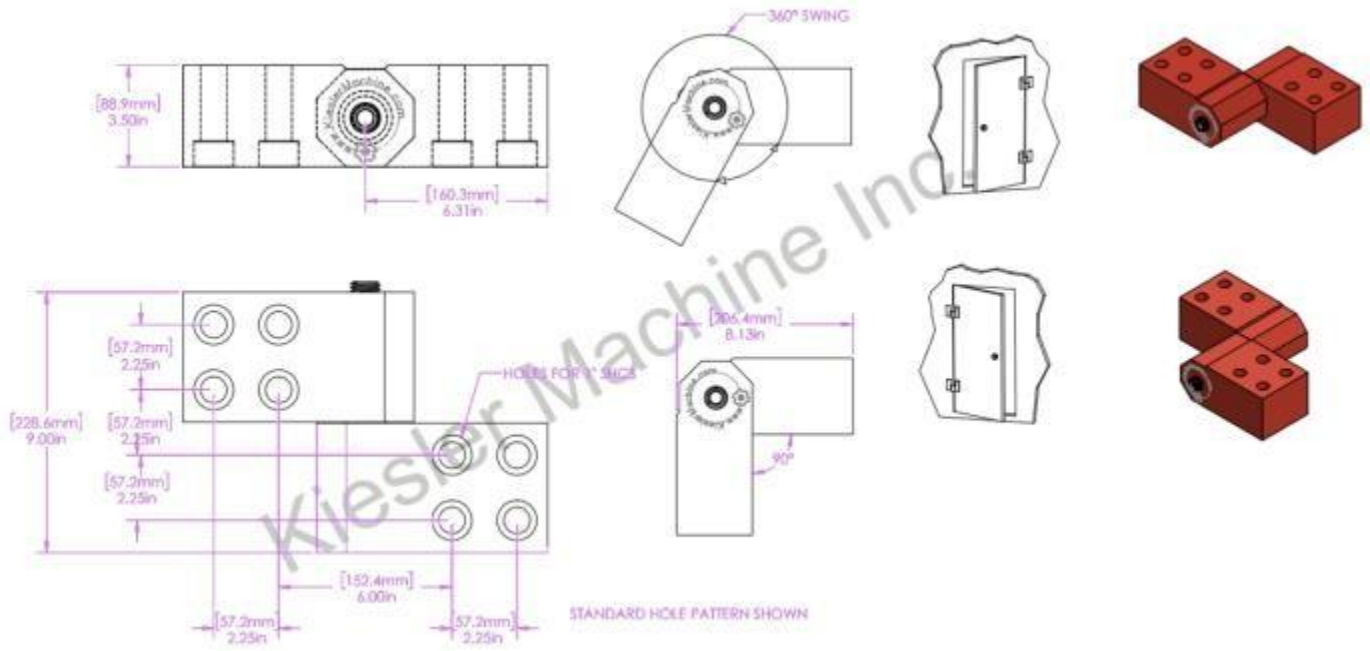

Kiesler Machine Inc

Kiesler Machine Inc

13700 Chrissy Lane NE
Palmyra, IN. 47164-8768

Contact Info :

info@kieslermachine.com
Toll-Free : 888-565-6610
Phone : 812-364-6610

Proudly Made in the USA

Smoother Than The Rest
Guaranteed!

Data Provided For Reference Only.

Disclaimer: This drawing is property of Kiesler Machine Inc, Kieslermachine.com. It is owned with the understanding that it will in no way be used in a manner which is harmful to Kiesler Machine Inc.